DUAL LINE LUBRICATION DIVIDER VALVES SERIES 02

CHARACTERISTICS

LUBRICANT: OIL / GREASE

ATEX CE Ex II2 GD MARKING

BASE THREADS INLETS: BSP AND NPT

2 VERSIONS:
NORMAL : ADJUSTABLE DELIVERY ON TURRET
FIX "F" FIXED DELIVERY

VERSATILITY IN LUBRICATION LAYOUT PLANNING

FLEXIBILITY TO EXPAND OR REDUCE THE NUMBER OF ELEMENTS TO MEET CHANGING REQUIREMENTS

BLANKING PLATES CAN BE PROVIDED TO ACCOMMODATE FUTURE REQUIREMENTS

SAVE ON LABOUR AND PIPING COSTS : THE METERING VALVES CAN BE SERVICED WITHOUT DISTURBING THE ASSEMBLY OR EXISTING PIPEWORK

LOWER MAINTENANCE COSTS: THE MODULAR CONCEPT PROVIDES LOWER COST REPLACEMENT COMPONENTS.

REDUCED SPARE PARTS, FEWER PARTS IN STOCK= LOWER INVENTORY COSTS

APPLICATIONS

PAPER MACHINES

STEEL PLANTS

CEMENTS WORKS

COKE PLANTS

LARGE CREANES AND LOADING EQUIPMENT

The modular Dual Line system consists of two main parts: **the Base and the Metering Valves**.
All Modular dual Line Elements and bases are made in nickel Plating or in SS 316.

The Nickel plating adopted by Dropsa is up to 70 times more resistant to corrosion in the field than the previous Zinc Plating and are available with inlets and outlets in UNI-ISO 7/1 (BSP) or NPTF threads.
The Metering Valves can be supplied with adjustable or fixed discharge.
The Valves with adjustable discharge are fitted with turrets provided with integral adjusting screws together with a metacrylate cover and seal.
A blanking plate to be ordered separately, can be provided on the Base to accommodate future additional points.
The Dual line elements now marked with a new laser marking system directly on the Nickel Plated element indicate the following information :

- ATEX CE Ex II2 GD Marking
- Single and Dual Outlet configuration information and Output values in cm3 and Cu.inch
- Part Number and Work Order Production (batch) identification.

APPLICATION EXAMPLE

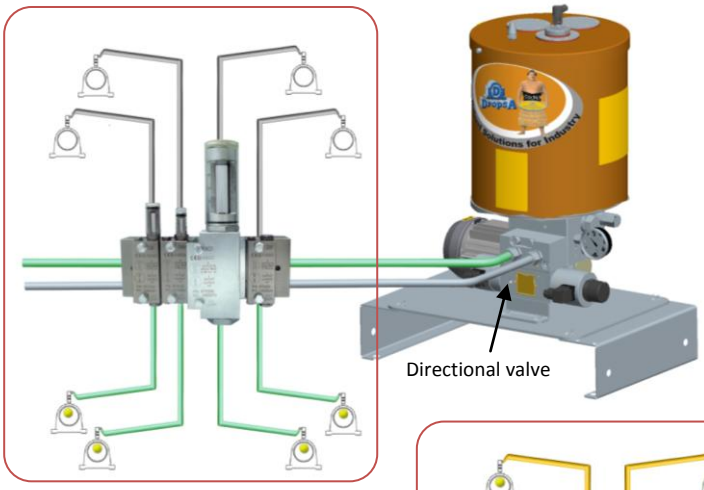

PRESSURE LINE 1

PRESSURE LINE 2

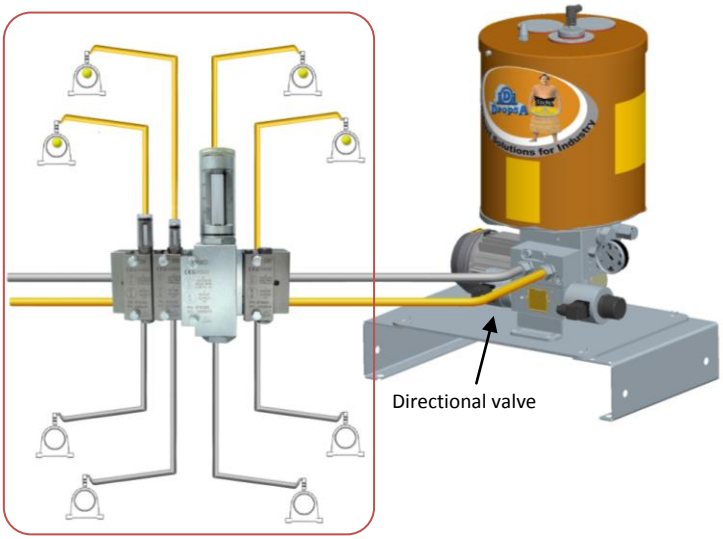

TECHNICAL INFORMATION

TECHNICAL CHARACTERISTICS		
Temperature		-30oC ÷ +80oC
Frequency		100 cycles/minute.
Max .Pressure (inlet)		400 bar
Lubricants		**min. Viscosity:**100 cSt **Max Grease.:** 265 ASTM (NLGI 2)
Base threads		**Inlet:** 3/8" BSP o 3/8" NPTF. **Outlet:** ¼" BSP o ¼" NPTF.
Flowrate	**Fix**	**DMMF-DMF-DBP-DMMXF-DMXF-DMGXF-DBPX**
	Adjastable	**DMM - DM - DMG- DMG1 - DMG2- DBP-DMMX-DMX-DMGX-DMGX1-DMGX2-DBPX**

DIMENSIONS

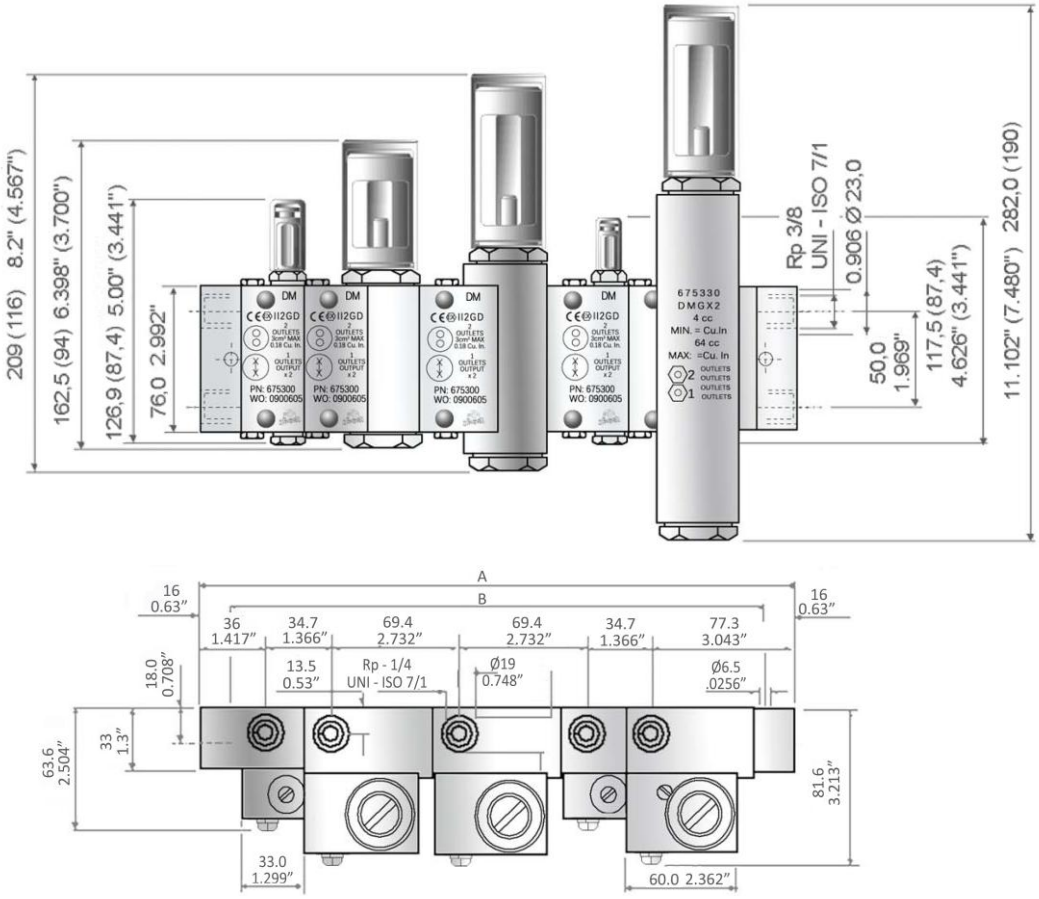

Many possible configurations can be achieved by mounting different types of intermediate bases.
The example on the right shows a typical configuration. You can obtain **A** and **B** Dimensions by adding up the various dimensions of each type of base.

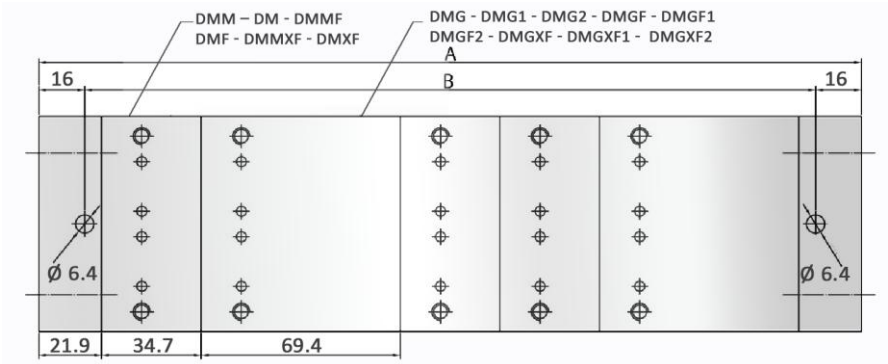

A	B
286.7 mm	**254.7 mm**
DMG - DMG1 - DMG2- DMGF - DMGF1 - DMGF2- DMGXF - DMGXF1 - DMGXF2	**DMM – DM- DMMF – DMF - DMMXF - DMXF**
69.4 mm	**34.7 mm**

PRE – ASSEMBLED VALVE ORDERING MODULE

DM- DMM VALEVS WITH TURRET - ADJUSTABLE FLOWRATE

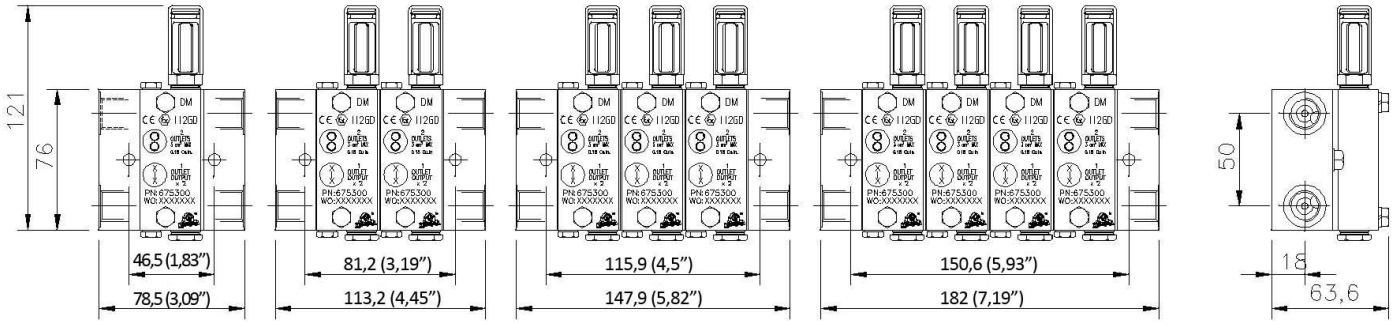

MODELS	FLOWRATE cm³(cu.in)	N. OUTPUT	BSP	NPTF
DM	da 0.25 a 3 (.015 - .183)	2	675981	675991
		4	675982	675992
		6	675983	675993
		8	675984	675994
DMM	da 0.1 a 1 (.006-.061)	2	675631	675641
		4	675632	675642
		6	675633	675643
		8	675634	675644

DMF AND DMMF VALVE WITHOUT TURRET – FIXED DELIVERY

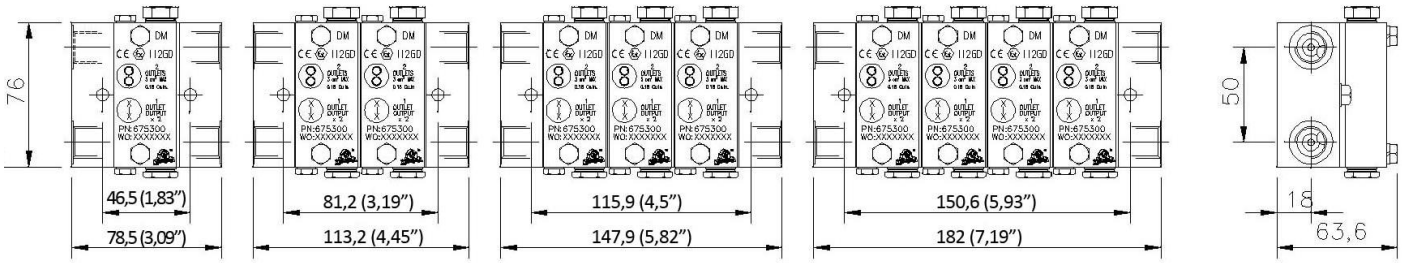

MODELS	FLOWRATE cm³ (cu.in)	N. OUTPUT	BSP	NPTF
DMF	3 (.183)	2	675611	675621
		4	675612	675622
		6	675613	675623
		8	675614	675624
DMMF	1 (.061)	2	675431	675441
		4	675432	675442
		6	675433	675443
		8	675434	675444

CONFIGURATION INFORMATION

IN FEW STEPS YOU CAN COMPOSE DIFFERENT KIND OF MODULES AS YOU NEED:

1. MATERIAL
2. VALVES
3. INTERMEDIATE BASE
4. INLET BASE
5. END BASE

	FLOWRATE cm³ (cu.in.)	VALVES	PART NO.	INTERMEDIATE BASE for 1/4"valves NPTF	INTERMEDIATE BASE for 1/4"valves BSP	INLET BASE for 3/8"valves NPTF	INLET BASE for 3/8"valves BSP	END BASE for 3/8"valves NPTF	END BASE for 3/8"valves BSP
NICKEL PLATED	0,1-1 (.006-.061)	DMM	675335	675322	675312	675321	675311	675323	675313
	0,25-1 (.015-.183)	DM	675300						
	1 (.061)	DMMF	675385						
	3 (.183)	DMF	675301						
	0,5-24 (.031-1.46)	DMG	675310	675324	675314				
	0,5-40 (.031-2.44)	DMG1	675320						
	49-88 (2.98-5.3)	DMG2	675330						
	Blanking Plate		675305						
AISI 316	0,1-1 (.006-.061)	DMMX	675635	675072	675012	675071	675011	675073	675013
	0,25-1 (.015-.183)	DMX	675600						
	1 (.061)	DMMFX	675685						
	3 (.183)	DMFX	675601						
	0,5-24 (.031-1.46)	DMGX	675610	675074	675013				
	0,5-40 (.031-2.44)	DMG1X	675620						
	49-88 (2.98-5.3)	DMG2X	675630						
	Blanking Plate		675605						

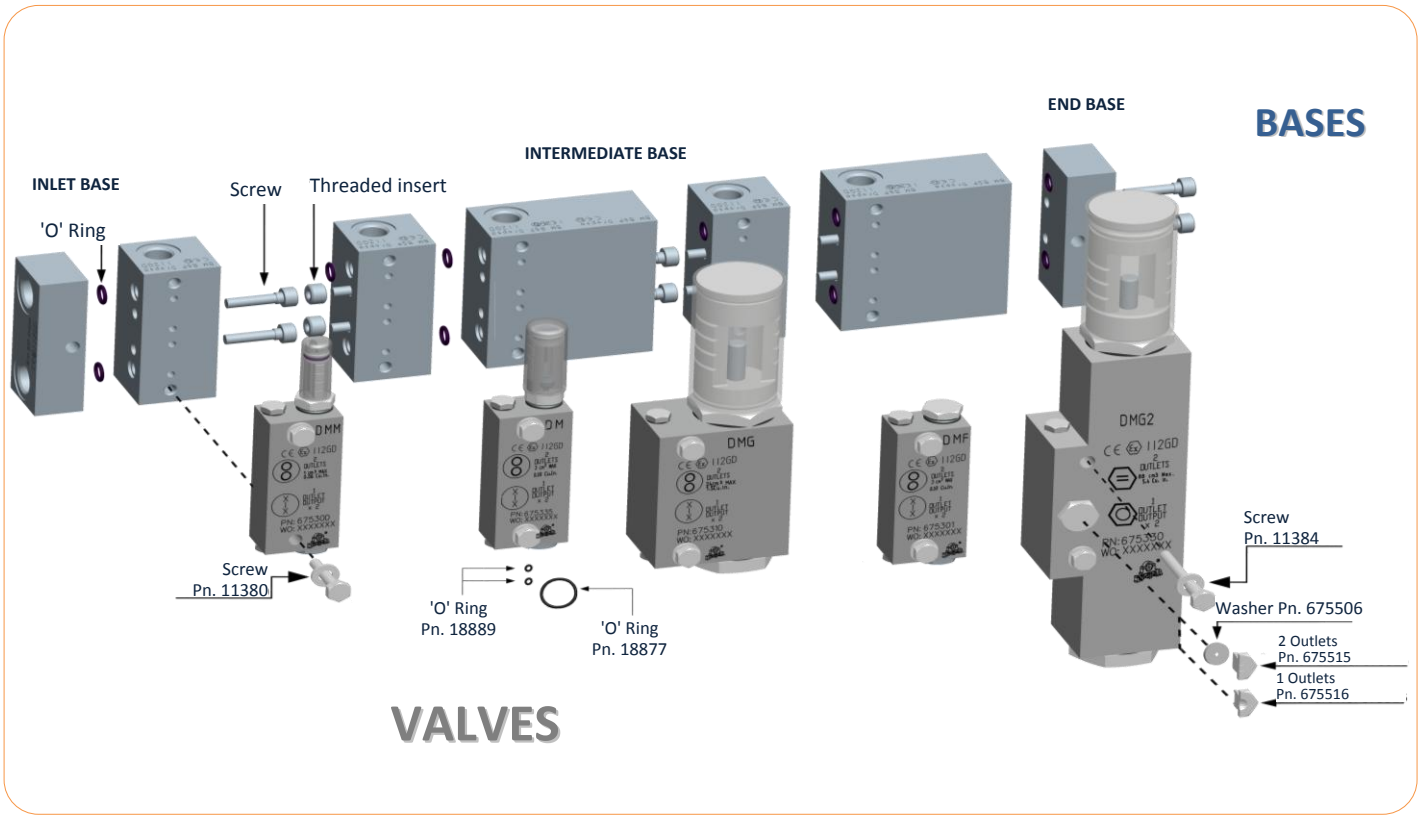

6.FITTINGS *ordered separately*

** Sold in boxes of 500 or add the "-1" suffix for purchasing in single multiples*

DESCRIPTION	P.NUMBER
Dual Line Bases Assembly screws	14090 *
Dual Line Bases threaded Inserts	1523343 *
Dual Line Elements Assembly Screw for	11380 *
Washer for Dual Line Element	16080 *
Base and Element Kit (2 Element Assembly Screw for +2 washer +2 Base threaded Inserts + 2 Base Assembly screws)	3140768

TUBING AND FITTINGS

FITTINGS ASSEMBLY

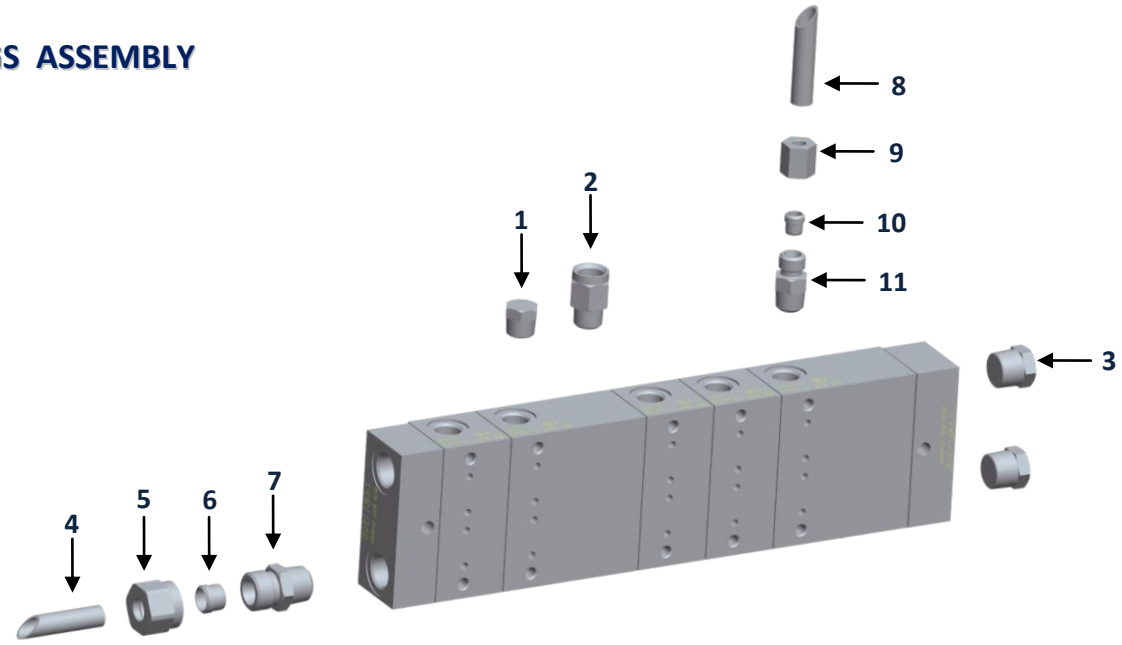

ITEM	DESCRIPTION	NICKEL PLATED	AISI 316
1	PLUG BSP	926001	519061
	PLUG NPTF	850304	519071
2	CHECK VALVE BSP	92313	519900
	CHECK VALVE NPTF	92340	519901
3	PLUG BSP	926002	519062
	PLUGNPTF	850305	519072
4	TUBE Ø10	5119808	5244112
	TUBE Ø12	5119809	5244113
	TUBE Ø16	5119801	5244115
5	NUT Ø10	91406	519045
	NUT Ø12	91411	519046
	NUTØ16	91416	519048
6	RING Ø10	91601	519015
	RING Ø12	91607	519016
	RING Ø16	91612	519018
7	3/8" CONNECTOR Ø10	91967	519115
	3/8" CONNECTOR Ø12	91975	519116
	3/8" CONNECTOR Ø16	91983	519127
	3/8" CONN'TR STEEL Ø10	91652	519142
	3/8" CONN'TR STEEL Ø12	91653	519143
	3/8" CONN'TR STEEL Ø16	91664	519154
8	TUBE Ø6	5119812	5244110
	TUBE Ø8	5119813	5244111
	TUBE Ø10	5119808	5244112
9	NUT Ø6	91396	519043
	NUT Ø8	91401	519044
	NUT Ø10	91406	519045
10	RING Ø6	91590	519013
	RING Ø8	91596	519014
	RING Ø10	91601	519015
11	¼" CONNECTOR Ø6	91952	519113
	¼" CONNECTOR Ø8	91959	519114
	¼" CONNECTOR Ø10	91966	519123
	¼" CONN'TR VITON Ø6	91650	519140
	¼" CONN'TR VITON Ø8	91651	519141
	¼" CONN'TR VITON Ø10	91660	519150

TURRET COVER		
Material	Mark	Part No.
Transparent	DMM	622207
Aluminum	DMMX	622210
Transparent	DM-DMX	671028
Aluminum	DM	618215
Transparent	DMG-DMGX	675524
Transparent	DMG1-DMGX1 DMG2-DMGX2	675525

REDUCTION	PART NO.
M 1/4 NPTF - F 1/4 BSP Reduction	3077166
M 3/8 NPTF - F 3/8 BSP Reduction	3077165
M 1/4 BSP - F 1/4 NPTF Reduction	3077059
M 3/8 BSP - F 3/8 NPTF Reduction	3077128

HOW TO CONVERT FROM ONE AT 2 OUTLETS

2 OUTLETS

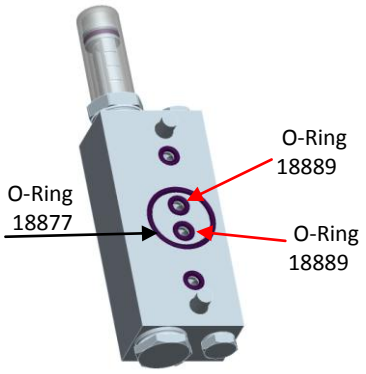

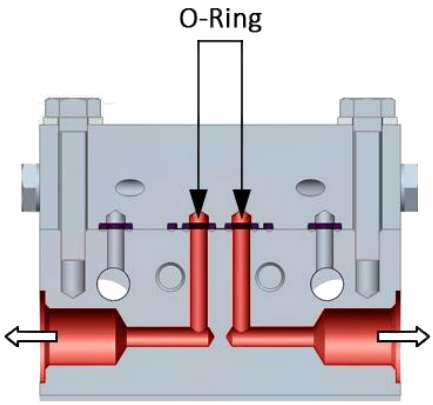

The valves are arranged for 2 free outlets.

To convert to a single outlet :

- Undo the fixing screws
- Turn over the element and remove the 2 inner small O-rings (part no. 18889)
- Fit the element back in place

NOTE

For series DMG2 only : remove the adapter Part no. 675515 and gasket Part no.675506 and replace with Part no. 675516.

1 OUTLET

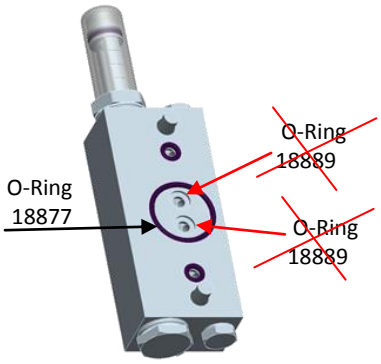

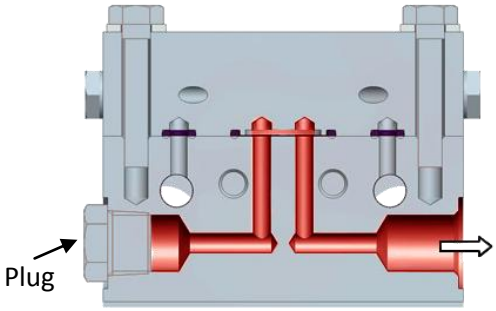

IMPORTANT: Remember to plug off the redundant outlet .
Use Plug part no.926001 (UNI-ISO)or Part no. 850304 (NPTF).

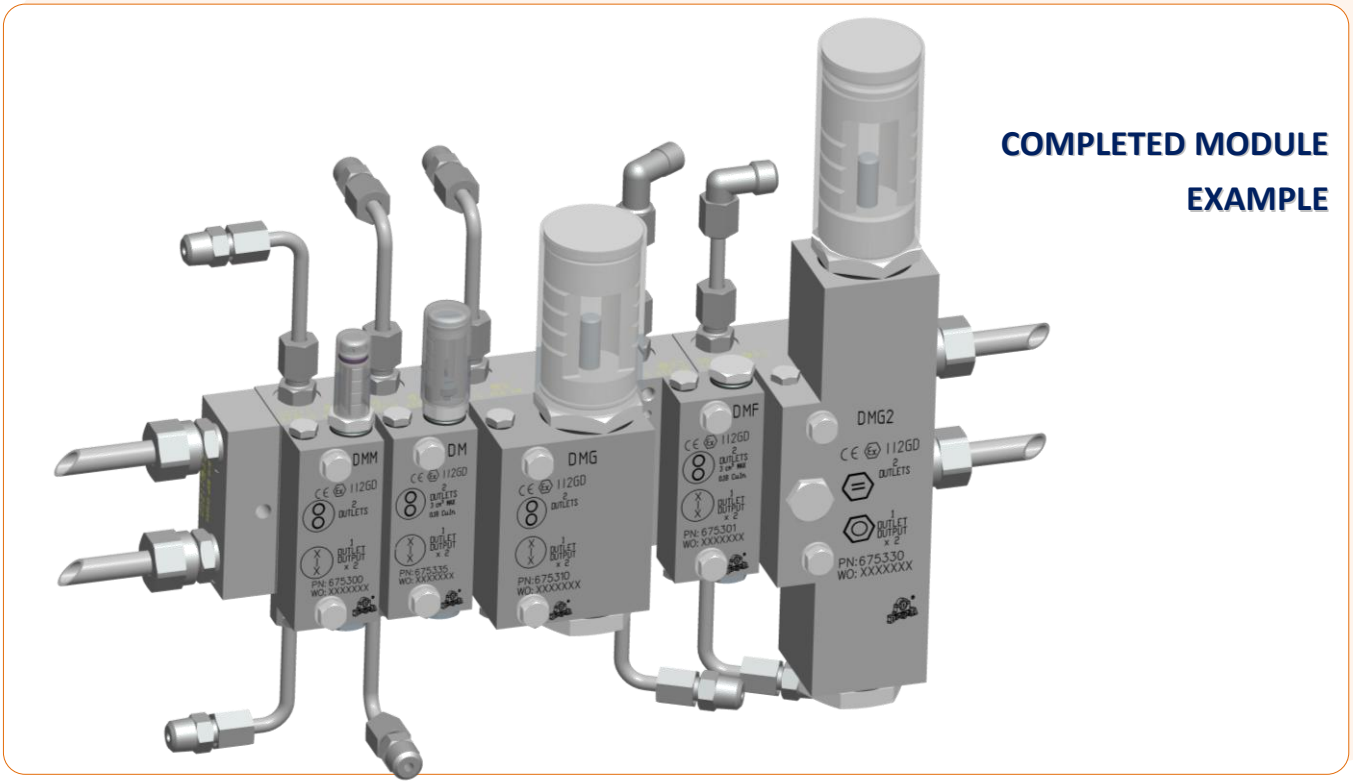

COMPLETED MODULE EXAMPLE

sales@dropsa.com
www.dropsa.com

ITALIA
Dropsa SpA
t. +39 02-250791

U.K.
DropsA (UK) Ltd
t. +44 (0)1784 431177

GERMANY
Dropsa Schmiertechnik GmbH
t. +49 (0)211 39 40 11

FRANCE
AME Dropsa
t. +33 (0)1 39 93 00 33

U.S.A.
Dropsa USA Incorporated
t. +1 586-566-1540

AUSTRALIA
Dropsa Australia Ltd.
t. +61 (02)-9938-6644

BRAZIL
Dropsa do Brazil
t. +55 (0)11-563-10007

CHINA
Dropsa Lubrication Systems (Shanghai) Co., Ltd
t. +86 (021) 67740275